Scandrive SEV120
External oscillator

The variable stroke oscillator for ink and dampening vibrators



Today's printers require extremely flexible operating conditions and the very best printing quality. Makers of printing presses require compact, flexible components enabling them to install all modern features into the minimum of space.

SKF's latest innovation, the SEV 120, makes a major step in meeting these needs by offering

- Infinitely variable stroke
- Remote control of stroke while the press is running
- Oscillator mechanism mounted on control side or drive side
- Compact, self-contained, sealed mechanism
- Electric, pneumatic, hydraulic or manual control

The SEV 120 oscillator is a development of SKF's well-established eccentric gears which offer very high reduction ratios, combined with the bent-axis mechanism used for many years in hydraulic motors and pumps. The whole mechanism is contained in a compact housing which can be sealed for life and can thus be located on the control side. Units suitable for central lubrication on the drive side are also available.

Fitting is simple – a tapered, threaded hole in the vibrator roller shaft plus three bolt holes in the press frame. The oscillator housing is factory machined to mate with the vibrator bush spigot, thus ensuring accurate alignment.

High operating speeds are possible. However, the reduction ratio selected should be high enough to retain inertia forces and oscillating frequencies within acceptable limits for the press.

Scandrive SEV120

Installation example/main dimensions for mounting on the control side, sealed for life

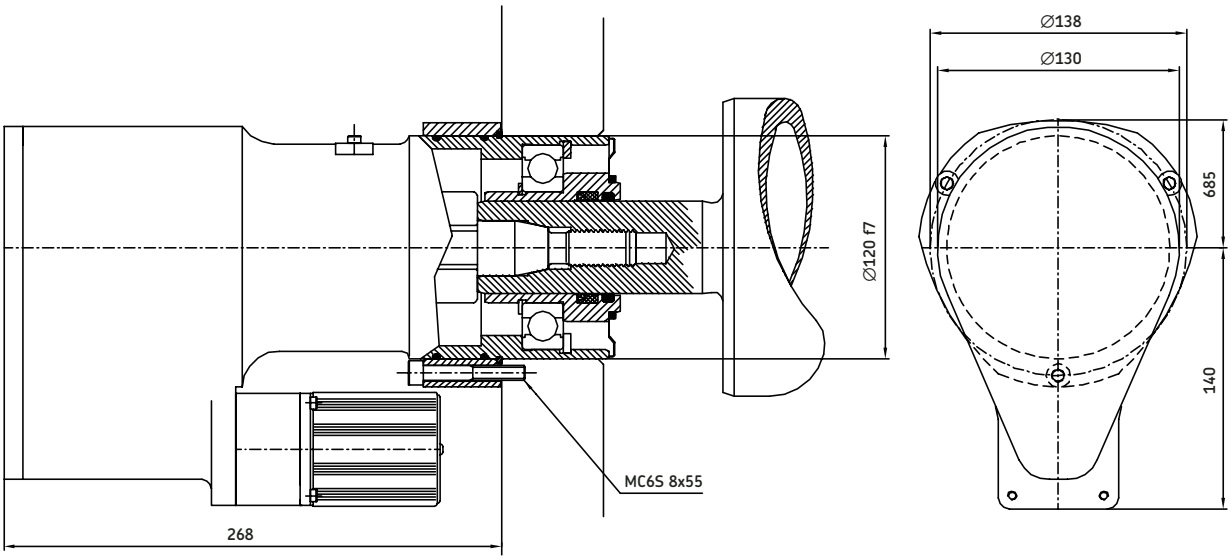

Technical data	Unit	Scandrive SEV120
Outside diameter	mm	130
Length (drive side with gearwheel)	mm	268
Length (control side)	mm	Approx. 310
Gear ratios	-	5,75:1, 7,8:1, 10,7:1 or 16,5:1
Vibrator roller speed range	rpm	0 to 3 000
Recommended oscillation frequency	Hz	1 to 3
Stroke	mm	0 to 35
Axial force, (inertia + friction) max	N	1 200
Recommended web width	mm	< 1 800
Recommended roller weight	kg	< 140

Please consult your SKF contact to check and approve all applications.

SKF Actuators AB
SE- 415 50 Gothenburg
www.actuators.skf.com

Publication **6339EN - 0607A**

SKF is a registered trademark of the SKF Group.

© SKF Group 2006
The contents of this publication are the copyright of the publisher and may not be reproduced (even extracts) unless prior written permission is granted. Every care has been taken to ensure the accuracy of the information contained in this publication but no liability can be accepted for any loss or damage whether direct, indirect or consequential arising out of the use of the information contained herein.